Saitell®

WE PROTECT

IP-5BL-F36-SA

5MP WDR IR Mini-Bullet Camera

5Mp H.265+ WDR 30m IR IP67

System Overview

The IR Megapixel Fixed camera delivers 2MP/4MP/5MP resolution with a 2.8mm/3.6mm fixed lens. The camera's elegant blend of aesthetics combined with a range of easy mounting solutions provides an excellent choice for a variety of small to mid-size applications at an affordable price.

Features

- 1/2.7" 5Megapixel progressive CMOS
- H.265 & H.264 dual-stream encoding
- 20fps@5M(2592×1944) &25/30fps@3M(2304×1296)
- WDR(120dB), Day/Night(ICR), 3DNR, AWB, AGC, BLC
- Multiple network monitoring: Web viewer, Unisight VMS
- 3.6 mm fixed lens
- Max IR LEDs Length 30m
- IP67, PoE

Dimensions(mm/inch)

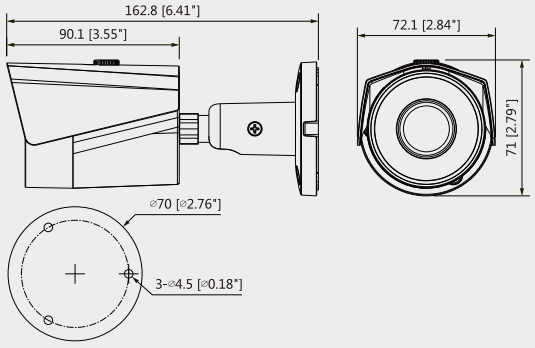

Functions

Smart H.265+

Smart H.265+ is the optimized implementation of the H.265 codec that uses a scene-adaptive encoding strategy, dynamic GOP, dynamic ROI, flexible multi-frame reference structure and intelligent noise reduction to deliver high-quality video without straining the network. Smart H.265+ technology reduces bit rate and storage requirements by up to 70% when compared to standard H.265 video compression.

Intelligent Video analysis (IVS)

The camera is equipped with a built-in intelligent analytic algorithm based on video, which can realize intelligent functions like Tripwire and Intrusion, to quickly and accurately respond to monitoring events in specific area, It can enhance monitoring efficiency. In addition, the camera supports intelligent tamper detection, which is to generate warning message via detecting dramatic scene change and to guarantee effective video surveillance.

Wide Dynamic Range (WDR)

The camera achieves vivid images, even in the most intense contrast lighting conditions, using industry-leading wide dynamic range (WDR) technology. For applications with both bright and low lighting conditions that change quickly, true WDR (120 dB) optimizes both the bright and dark areas of a scene at the same time to provide usable video.

Smart IR Technology

With IR illumination, detailed images can be captured in low light or total darkness. The camera's Smart IR technology adjusts the intensity of camera's infrared LEDs to compensate the distance of an object. Smart IR technology prevents IR LEDs from whitening out images as they come closer to the camera. The camera's integrated infrared illumination provides high performance in extreme low-light environments up to 30m(98ft).

Protection (IP67, wide voltage)

The camera allows for ±10% input voltage tolerance, suitable for the most unstable conditions for outdoor applications. Its 2KV lightning rating provides effective protection for both the camera and its structure against lightning. Subjected and certified to rigorous dust and immersion tests (IP67), the camera is the choice for installation in even the most unforgiving environments.

Environmental

The cameras operate in extreme temperature environments, rated for use in temperatures from -30° C to +60° C (-22° F to +140° F) with 95% humidity.

Image flip

Capturing unnecessary data such as surrounding hallway walls can increase storage requirements without any added value. The image flip feature allows the camera's image to be rotated in 90° increments for better video optimization.

Interoperability

The camera conforms to the ONVIF (Open Network Video Interface Forum) specifications, ensuring interoperability between network video products regardless of manufacturer.

ONVIF PSIA

Saitell®

Copyright @ Saitell Technology USA,INC. . All rights reserved.
Email: sales.usa@saitell.com Website: www.saitell.com
Address: 99 Inverness Dr E #180 Englewood, CO 80112-5122 USA

Saitell®

WE PROTECT

IP-5BL-F36-SA

Technical Specification

Camera

Image Sensor	1/2.7" 5Megapixel progresive CMOS
Effective Pixels	2592(H)x1944(V)
RAM/ROM	512MB/32MB
Scanning System	Progressive
Electronic Shutter Speed	Auto/Manual, 1/3~1/100000s
Minimum Illumination	0.03Lux/F2.0(Color,1/3s,30IRE) 0.3Lux/2.0(Color,1/30s,30IRE) 0Lux/F2.0(IR on)
S/N Ratio	More than 50dB
IR Distance	Distance up to 30m(98ft)
IR On/Off Control	Auto/ Manual
IR LEDs	18

Lens

Lens Type	Fixed
Mount Type	Board-in
Focal Length	3.6 mm
Max. Aperture	F2.0/F2.0
Angle of View	H:96°/78°, V:70°/58°
Focus Control	Fixed
Close Focus Distance	N/A

	Lens	Detect	Observe	Recognize	Identify
DORI Distance	2.8 mm	63m(207ft)	25m(82ft)	13m(43ft)	6m(20ft)
	3.6 mm	80m(262ft)	32m(105ft)	16m(52ft)	8m(26ft)

PTZ

Pan/Tilt Range	Pan:0° ~360° ;Tilt:0° ~90° ;Rotation:0° ~360°

Intelligence

IVS	Tripwire, Intrusion

Video

Compression	H.265+/H.265/H.264+/H.264
Streaming Capability	2 Streams
Resolution	5M(2592x1944)/4M(2688x1520/2560x1440)/3M(2304x1296)/1080P(1920×1080)/SXGA(1280×1024)/1.3M(1280×920)/720P(1280×720)/D1(704×576/704×480)/VGA(640×480)/CIF(352×288/352×240)
Frame Rate	5M(1 ~ 20fps)/3M (1 ~ 25/30fps) D1/CIF(1 ~ 25/30fps)
Bit Rate Control	CBR/VBR
Bit Rate	H.265: 12K ~ 8448Kbps H.264: 32K ~ 10240Kbps
Day/Night	Auto(ICR) / Color / B/W
BLC Mode	BLC / HLC / WDR(120dB)
White Balance	Auto/Natural/Street Lamp/Outdoor/Manual
Gain Control	Auto/Manual
Noise Reduction	3D DNR
Motion Detetion	Off / On (4 Zone, Rectangle)
Region of Interest	Off / On (4 Zone)
Electronic Image Stabilization (EIS)	N/A
Smart IR	Support
Digital Zoom	16x
Flip	0°/90°/180°/270°
Mirror	Off / On
Privacy Masking	Off / On (4 Area, Rectangle)

Audio

Compression	N/A

Network

Ethernet	RJ-45 (10/100Base-T)
Protocol	HTTP;TCP;ARP;RTSP;RTP;UDP;RTCP;SMTP;FTP;DHCP;DNS;DDNS;PPPOE;IPv4/v6;SNMP;QoS;UPnP;NTP
Interoperability	ONVIF, PSIA, CGI
Streaming Method	Unicast / Multicast
Max. User Access	10 Users / 20 Users
Edge Storage	NAS Local PC for instant recording
Web Viewer	IE, Chrome, Firefox, Safari
Management Software	Unisight VMS
Smart Phone	IOS, Android

Certifications

Certifications	CE (EN 60950:2000) UL:UL60950-1 FCC: FCC Part 15 Subpart B

Interface

Video Interface	N/A
Audio Interface	N/A
RS485	N/A
Alarm	N/A

Electrical

Power Supply	DC12V PoE(802.3af)(Class 0)
Power Consumption	<4.85W

Copyright @ Saitell Technology USA,INC. . All rights reserved.

Email: sales.usa@saitell.com Website: www.saitell.com
Address: 99 Inverness Dr E #180 Englewood, CO 80112-5122 USA

Saitell®

WE PROTECT

IP-5BL-F36-SA

Environmental	
Operating Conditions	-30° C ~ +60° C (-22° F ~ +140° F) / Less than 95% RH
Strorage Conditions	-30° C ~ +60° C (-22° F ~ +140° F) / Less than 95% RH
Ingress Protection	IP67
Vandal Resistance	N/A
Construction	
Casing	Metal+Plastic
Dimensions	Φ70mmx162. 8mm(2.76"x6.41")
Net Weight	0.38Kg(0.84lb)
Gross Weight	0.44Kg(0.97lb)

Accessories (optional)

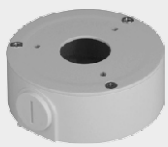

PFA134
Junction Box

PFA150
Pole Mount

PFA151
Corner Mount

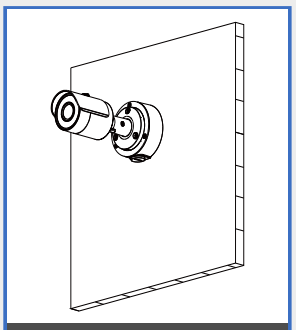

PFA134
Junction Mount

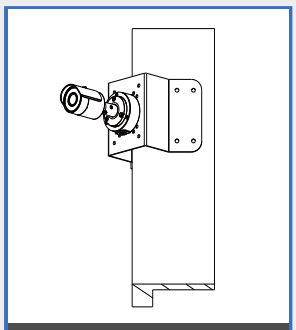

PFA134+PFA151
Corner Mount

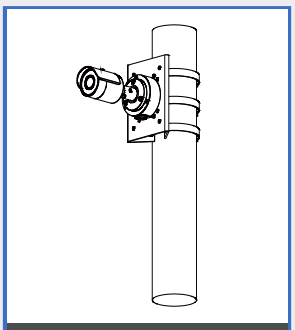

PFA134+PFA150
Pole Mount

Saitell®

Copyright @ Saitell Technology USA,INC. . All rights reserved.
Email: sales.usa@saitell.com Website: www.saitell.com
Address: 99 Inverness Dr E #180 Englewood, CO 80112-5122 USA